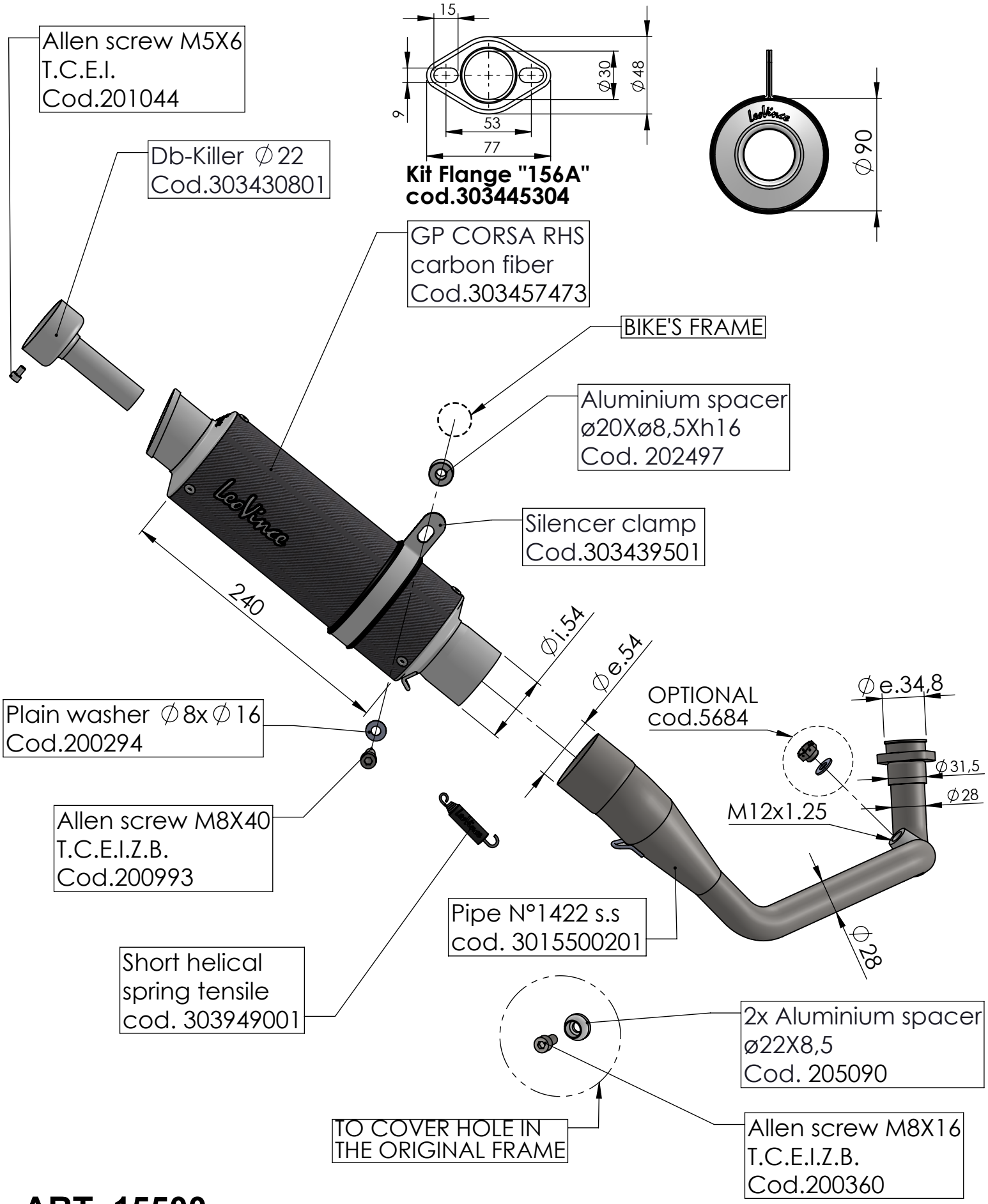

ART. 15500

APRILIA SR GT 125 / 200

FULL SYSTEM - GP CORSA - CARBON